WAAS CH 86438 W32A	APP CRS 324°	Rwy ldg 5731 TDZE 4546 Apt Elev 4595

RNAV (GPS) RWY 32
FORT MORGAN MUNI (FMM)

DME/DME RNP-0.3 NA. When local altimeter setting not received, use Akron altimeter setting: increase all DA to 4879 feet and all visibilities ⅛ mile; increase all MDA 100 feet and all Cat C and D visibilities ¼ mile. Night landing: Rwy 8, 17, 26, 32, 35 NA. Helicopter visibility reduction below 1 SM NA.

MISSED APPROACH: Climb to 7400 direct ECUDI and hold.

AWOS-3	DENVER CENTER	UNICOM
132.95	118.475 225.4	123.05 (CTAF) L

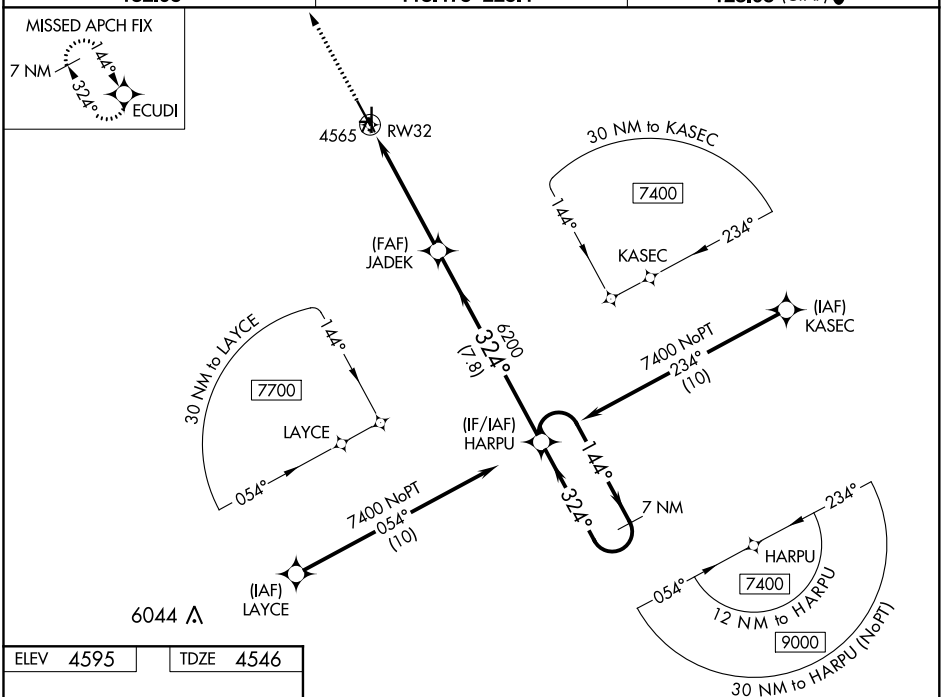

ELEV 4595	TDZE 4546

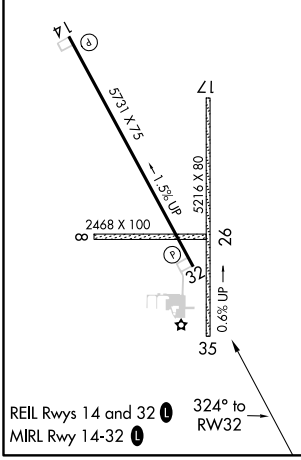

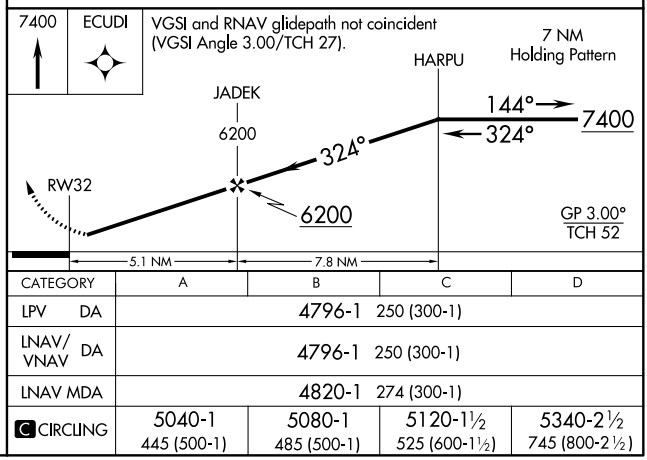

CATEGORY	A	B	C	D
LPV DA	4796-1 250 (300-1)			
LNAV/VNAV DA	4796-1 250 (300-1)			
LNAV MDA	4820-1 274 (300-1)			
C CIRCLING	5040-1 445 (500-1)	5080-1 485 (500-1)	5120-1½ 525 (600-1½)	5340-2½ 745 (800-2½)

SW-1, 03 DEC 2020 to 31 DEC 2020

SW-1, 03 DEC 2020 to 31 DEC 2020