RAPID CITY, SOUTH DAKOTA

TACAN Y RWY 31

ELLSWORTH AFB (KRCA)

TACAN RCA Chan 25	APCH CRS 302°	Rwy ldg 13,497 TDZE 3192 Arpt Elev 3276	AL-343 [USAF]

T * When ALS inop, increase CAT AB RVR to 55 and vis to 1 mile, increase CAT CDE vis to 1¾ mile.
** CAT E circling restricted to 28th BW aircraft only; 28th BW aircraft will remain within Class D airspace.

ALSF-1

MISSED APPROACH: Track outbound RCA R-310 to 3 DME (APOGE), then turn right to join RCA R-043 to 15 DME (RUUSH) and hold. Maintain 6000.

ATIS ★	ELLSWORTH APP CON	ELLSWORTH TOWER ★	GND CON
120.625 269.9	119.5 259.1	126.05 253.5	121.8 275.8

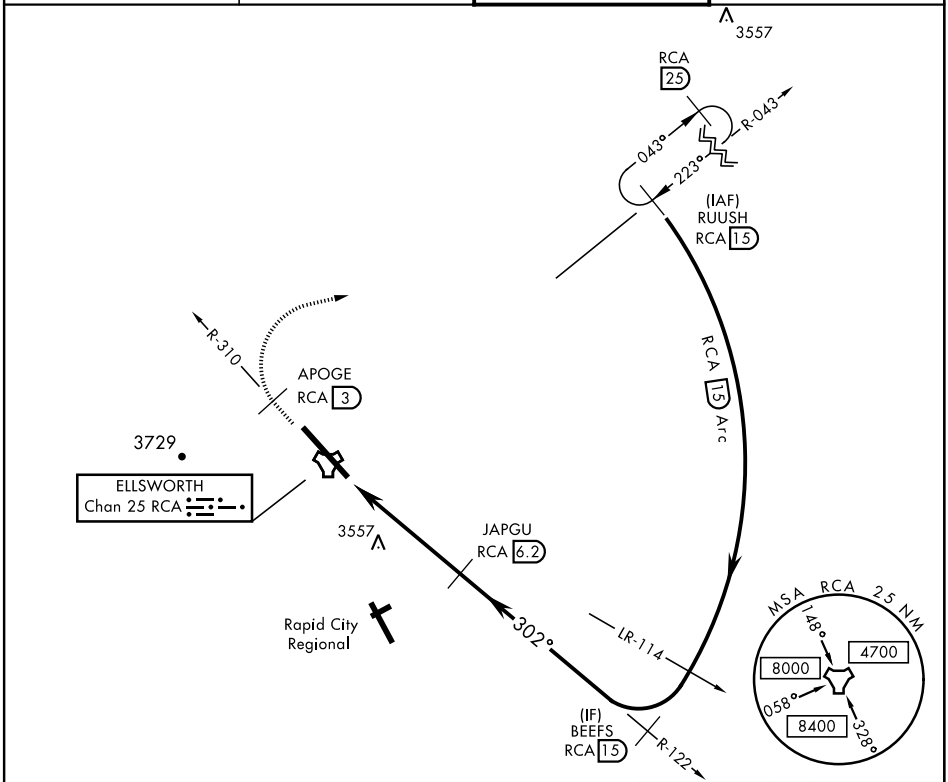

EMERG SAFE ALT 100 NM 9800

ELEV 3276	TDZE 3192

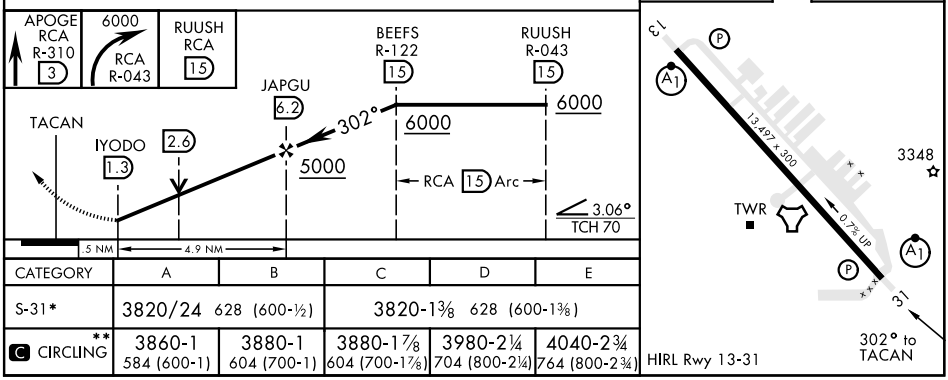

CATEGORY	A	B	C	D	E
S-31*	3820/24 628 (600-½)		3820-1⅜ 628 (600-1⅜)		
C CIRCLING **	3860-1 584 (600-1)	3880-1 604 (700-1)	3880-1⅞ 604 (700-1⅞)	3980-2¼ 704 (800-2¼)	4040-2¾ 764 (800-2¾)

NC-1, 31 DEC 2020 to 28 JAN 2021
NC-1, 31 DEC 2020 to 28 JAN 2021